The Coffee Bag Template 350gr

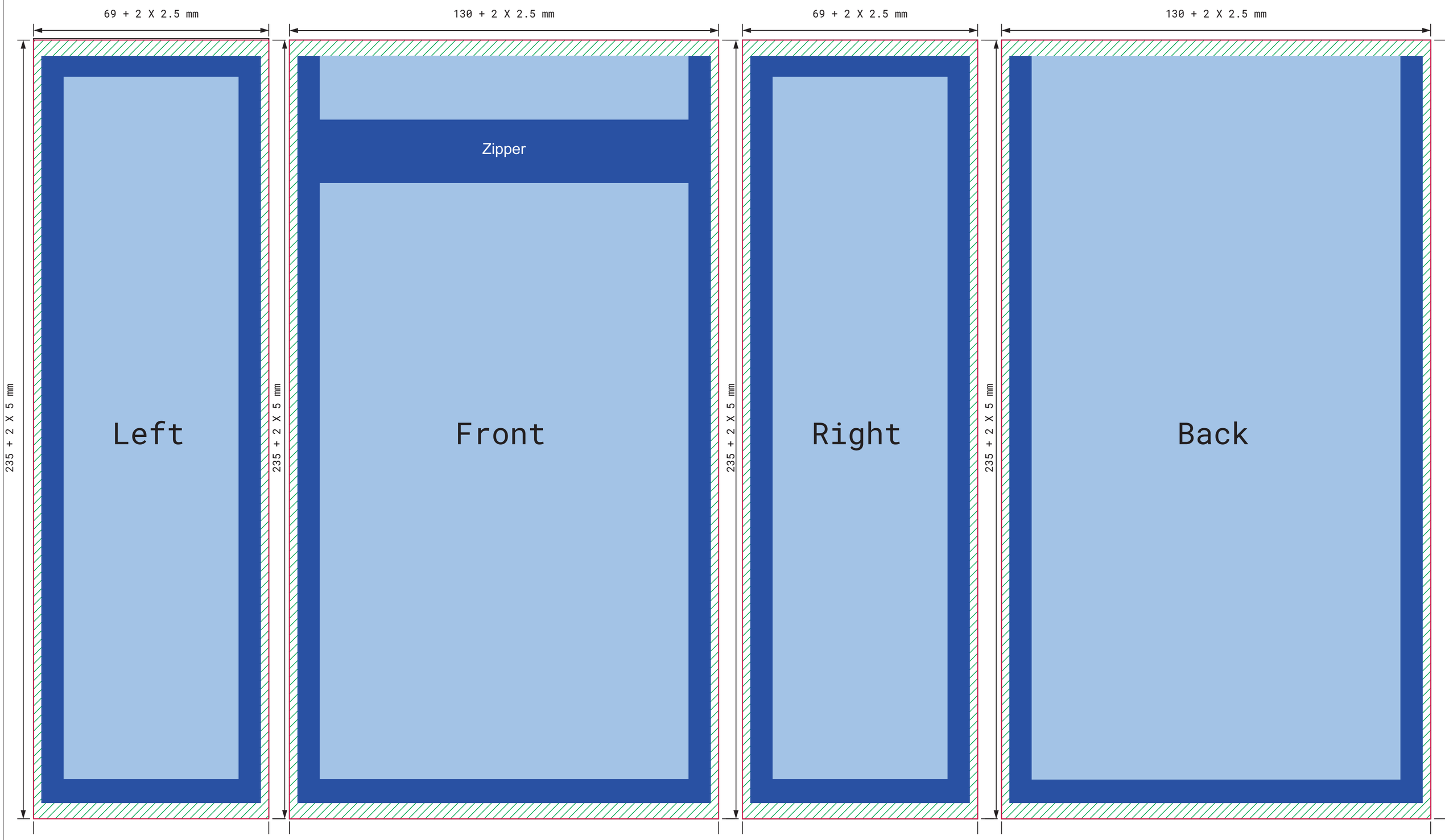

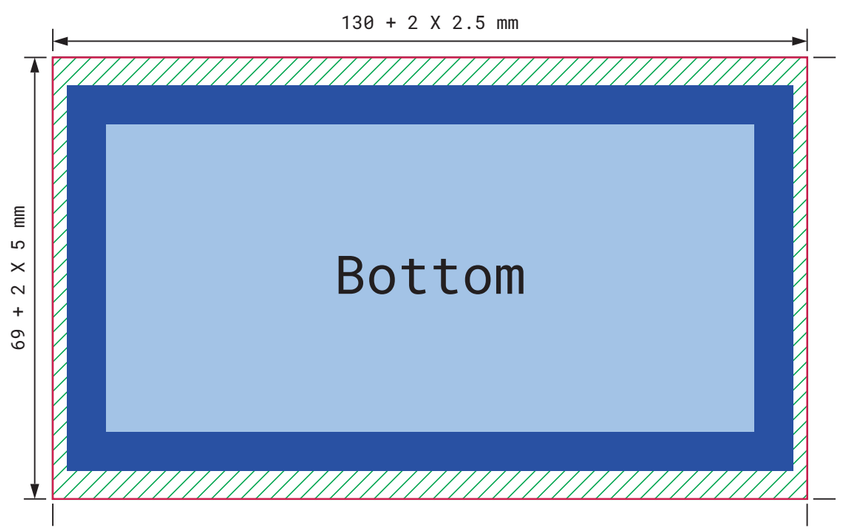

Before you start creating magic, please read this information carefully.

About this printing template:

The template consists of 4 layers:
Designer information, White, Scheme, and Design.

a) Designer Information: This layer is important for designers as it explains the different layers and areas in this print template. If you don't need this information, you can delete this layer whenever you want.

b) White Layer: This layer is already printed as a white base. If your bag will be fully printed, fill this layer completely with the color Magenta. If you want to create a metallic effect with elements like silver or gold, the area under the metallic element needs to be removed. Remember, do not delete this layer.

c) Scheme: This layer shows the lines for cutting, measurements, and positions for sealing when creating your bags. Please keep this layer.

d) Design: Use this layer to create your design.

Explanation of the design Zones:

Safe Zone:
It is advised to position all important text and graphics within this designated zone to ensure clear visibility and avoid any risk of being cut off.

Heat-Seale Zone:
This specific area is where the bag is sealed. Please note that dark colors may cause slight color variations due to the application of heat during sealing.

Extended Bleed Zone:
To account for potential cutting variations during production, it is recommended to extend your design and the White layer beyond the actual dimensions of the bag. Extend them by 5 mm on the left and right sides, and by 5 mm on the top and bottom. This ensures no unwanted borders appear on the cut edges. Avoid placing text or important graphics (such as EAN codes or logos) in this zone, as they may be cut off.

By embracing these guidelines like a pro, your design will rock that bag like a superstar, avoiding any unwelcome surprises or mishaps in the production dance. So let's keep those elements in check, ensuring they shine bright without any unexpected disappearing acts.

If you find yourself lost in the labyrinth of design, fear not! We are here to lend a helping hand and guide you towards the finish line. For detailed instructions on creating artwork and achieving metallic effects, Reach out to us at **hello@oyepackaging.com** if you need assistance in bringing your design to life. Together, we'll conquer any obstacles and make it a success!